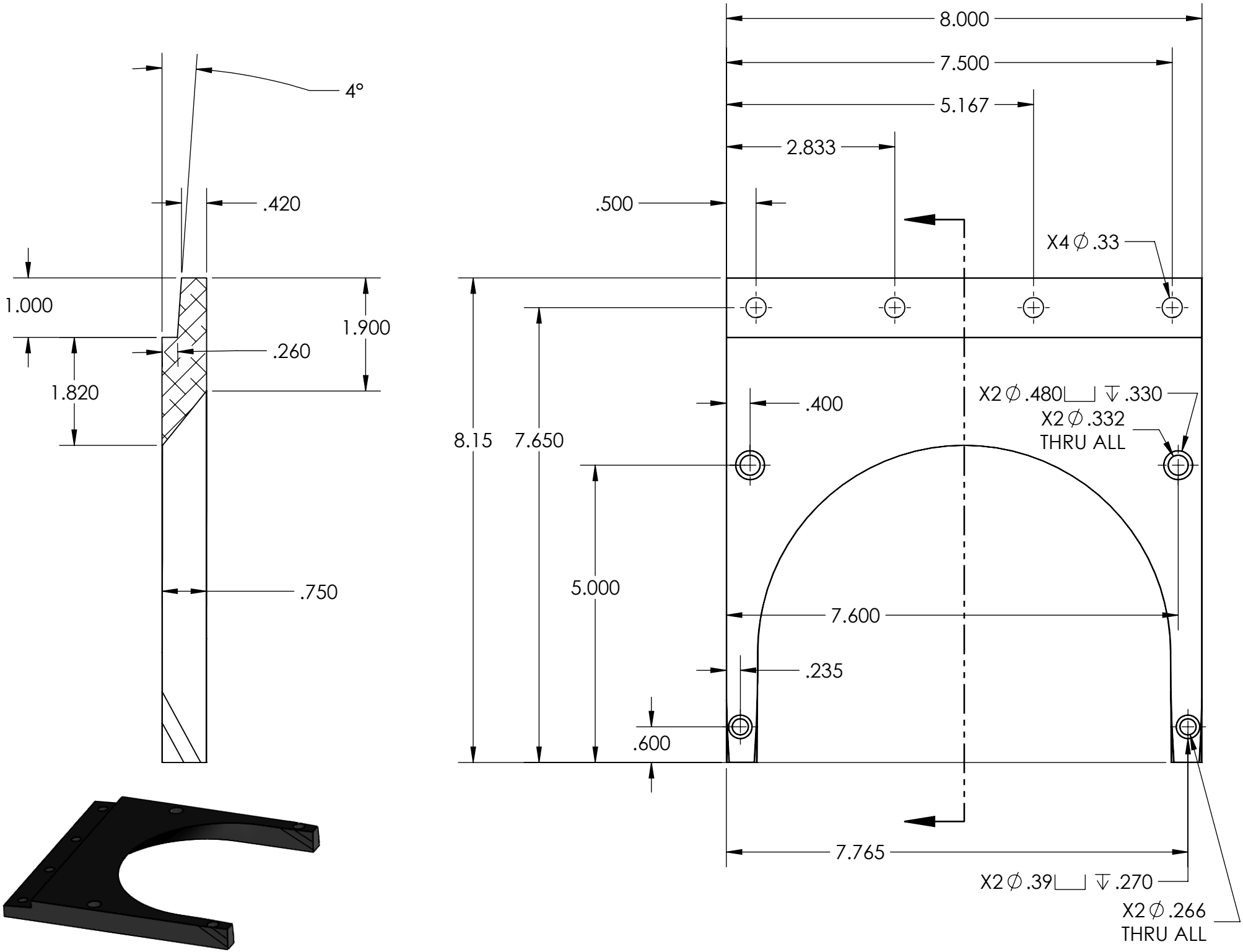
4°
.420
1.000
1.900
.260
1.820
.750
8.000
7.500
5.167
2.833
.500
X4 ∅ .33
8.15
7.650
.400
X2 ∅ .480 ⌴ ↧ .330
X2 ∅ .332
THRU ALL
5.000
7.600
.235
.600
7.765
X2 ∅ .39 ⌴ ↧ .270
X2 ∅ .266
THRU ALL